StanPro
The Right Fit
A Division of Cooper-Standard Automotive
P.O. Box 8034
Novi, MI 48376

TOLL-FREE: 800-333-3265
PHONE: 248-596-6178
FAX: 248-596-6774
EMAIL: StanPro@cooperstandard.com
WEB: www.stanpro.com

TECHNICAL QUESTIONS:
PHONE: 248-596-6111
EMAIL: StanProQC@cooperstandard.com

Drawings are not to scale.
Parentheses indicate reference dimension.

Clips

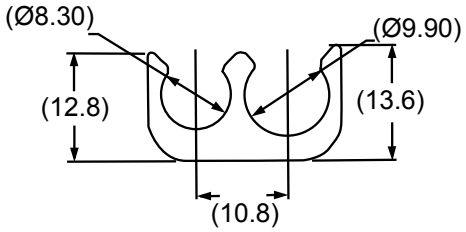

Part # / Qty
75003136 / 2000 75003186 / 250

Dimensions	Application	Color
5/16 - 3/8	Two tube	Natural

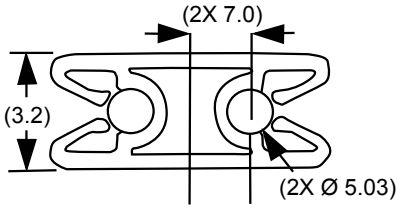

Part # / Qty
75003137 / 1700 75003187 / 250

Dimensions	Application	Color
3/16 - 3/16	Two tube	Black

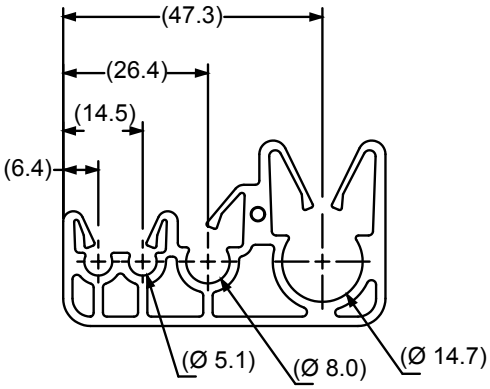

Part # / Qty
75003138 / 800 75003188 / 250

Dimensions	Application	Color
3/16 - 3/16 - 5/16 - 1/2	Four tube	Black

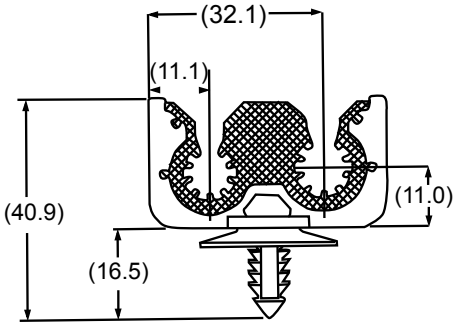

Part # / Qty
75003139 / 1000 75003189 / 250

Dimensions	Application	Color
3/8 - 5/16	Two tube -w/ santoprene	Black

To be used in a Ø 5.87 - Ø 6.13 mm hole of 1.24 - 1.93 mm panel thickness

StanPro
The Right Fit
A Division of Cooper-Standard Automotive
P.O. Box 8034
Novi, MI 48376

TOLL-FREE: 800-333-3265
PHONE: 248-596-6178
FAX: 248-596-6774
EMAIL: StanPro@cooperstandard.com
WEB: www.stanpro.com

TECHNICAL QUESTIONS:
PHONE: 248-596-6111
EMAIL: StanProQC@cooperstandard.com

Drawings are not to scale.
Parentheses indicate reference dimension.

Clips

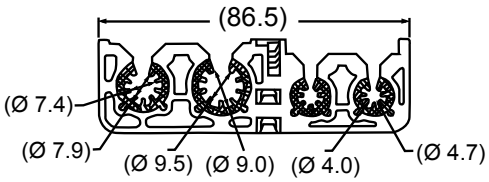

Part # / Qty	Dimensions	Application	Color
75003140 / 450 75003190 / 250	5/16 - 3/8 - 3/16 - 3/16	Four tube -w/ santoprene	Black

To be used with M5 X 1.6 14mm weld stud

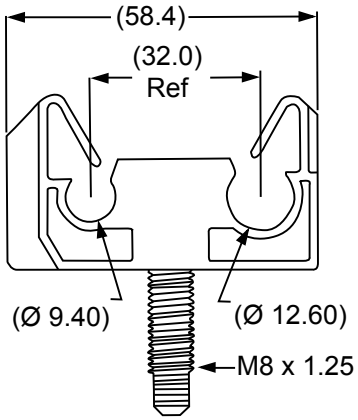

Part # / Qty	Dimensions	Application	Color
75003141 / 350 75003191 / 250	3/8 - 1/2	Two tube w/M8 stud	Black

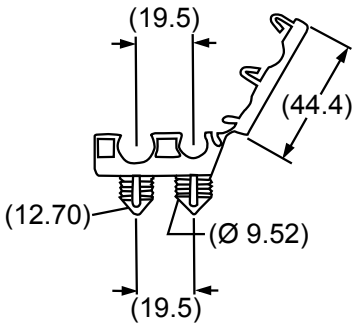

Part # / Qty	Dimensions	Application	Color
75003142 / 900 75003192 / 250	3/8 - 1/2	Two tube - 2 tree w/ foldover	Black

Small tree - Ø 10.7 to be used in hole Ø 10.0 - 10.2mm with thickness 1.8 - 2.2mm

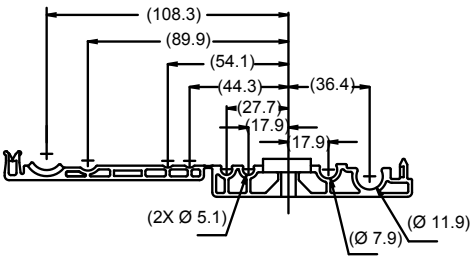

Part # / Qty	Dimensions	Application	Color
75003143 /500 75003193 / 250	3/16 - 3/16 - 5/16 - 12mm	Four tube w/ foldover	Black

To be used with a M6 X 1 X 17 stud

StanPro
The Right Fit
A Division of Cooper-Standard Automotive
P.O. Box 8034
Novi, MI 48376

TOLL-FREE: 800-333-3265
PHONE: 248-596-6178
FAX: 248-596-6774
EMAIL: StanPro@cooperstandard.com
WEB: www.stanpro.com

TECHNICAL QUESTIONS:
PHONE: 248-596-6111
EMAIL: StanProQC@cooperstandard.com

Drawings are not to scale.
Parentheses indicate reference dimension.

Clips

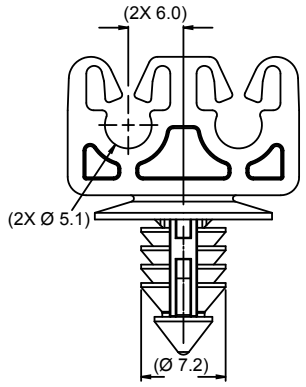

Part # / Qty	Dimensions	Application	Color
75003144 / 3400 75003194 / 250	3/16 - 3/16	Two tube w/ tree	Black

Part to be used in Ø 5.87 - Ø 6.13mm hole of 1.8 ± 0.3mm panel thickness

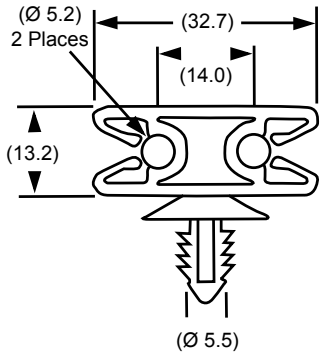

Part # / Qty	Dimensions	Application	Color
75003145 / 1300 75003195 / 250	3/16 - 3/16	Two tube w/ tree	Black

Christmas tree to be used with Ø 6.35 hole and 2.1mm panel thickness

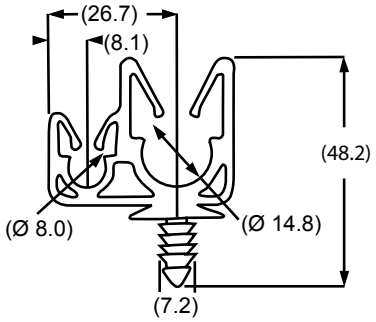

Part # / Qty	Dimensions	Application	Color
75003146 / 1500 75003196 / 250	5/16 - 1/2	Two tube w/ tree	Black

This part to be used in a Ø 6.00mm hole of 1.24mm - 1.74mm panel thickness

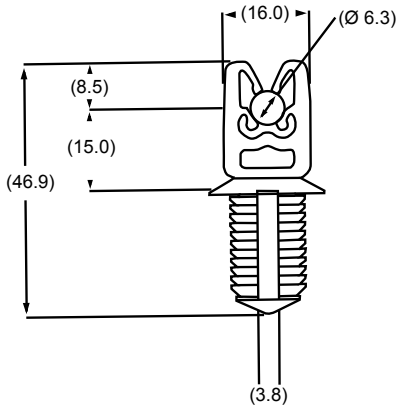

Part # / Qty	Dimensions	Application	Color
75003147 / 750 75003197 / 250	1/4	One tube w/ tree	Black

To be used with hole diameter 12.75/13.03 and panel thickness 10.0mm